P3 series/

Scara Robot

Model **P3-401S**

Operating range Arm length400mm Joint#3 stroke 150mm

Payload Rated 1kg/Maximum 3kg

Standard cycle time 0.43 sec

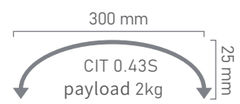

Cycle time based on round-trip arch motion (300mm horizontal,25mm vertical) with 2kg payload (path coordinates optimized for maximum speed)

Repeatability ±0.01mm Joint #1,#2 ±0.01mm Joint #3 ±0.01° Joint #4

Parameters of each axis

Joint / Content	#1	#2	#3	#4
MAX Operating Speed	6000mm/s		1100mm/s	2600°/s
MAX Motion Range	±132°	±141°	150mm	±360°
Motor Power Consumption	400W	100W	100W	100W
Joint#3 down force			100N	
Weight	16kg（cables not included）			

Joint #4 allowable moment of inertia，rate 0.005kg·m², maximum 0.05kg·m²

Electrical parameters

Origin Return	None Need Origin Return
Installed wire for customer	26 Pin（D-Sub Connector）
Installed pneumatic tube for customer use	ϕ4mm*1，ϕ6mm*2
Visual Interface	M12*2 Gigabit network interface
Installation Environment	Standerd/Clean（Customized）

Outer Dimensions and Motion Range

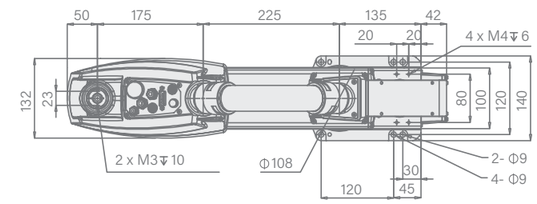

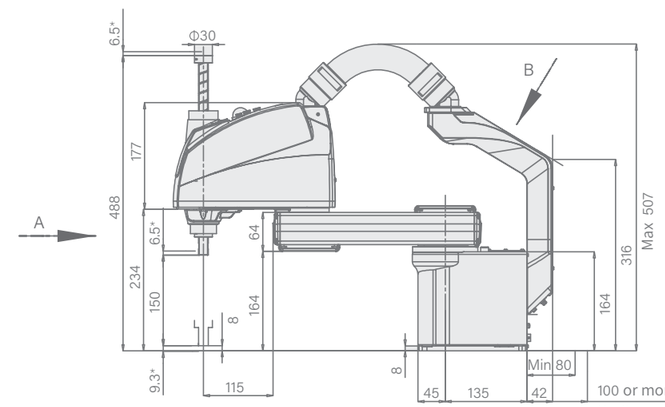

100 or more space for cables

*indicates mechanical stop position

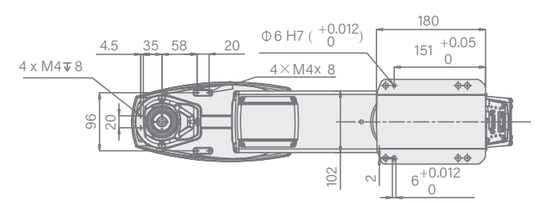

Detailed view from A

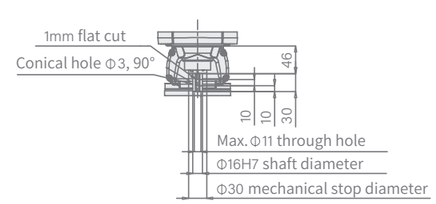
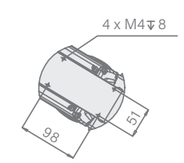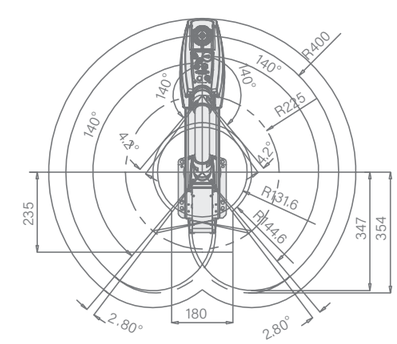
Detailed view from B